No. 60 / GER 51 6th prolongation after a few renovations

CERTIFICATE OF JUMPING HILL
CERTIFICAT DE CONFORMITE
SCHANZENPROFILBESTÄTIGUNG

Date of issue **Établi le** **Ausgestellt am**	12.10.2023	**Valid till** **Valable jusq` au** **Gültig bis**	30.04.2028
Place:	Mühlleithen	**Name:**	Vogtlandschanze

HS = 85 **m** **h/n** 0,52 **Vo =** 25,88 m/s

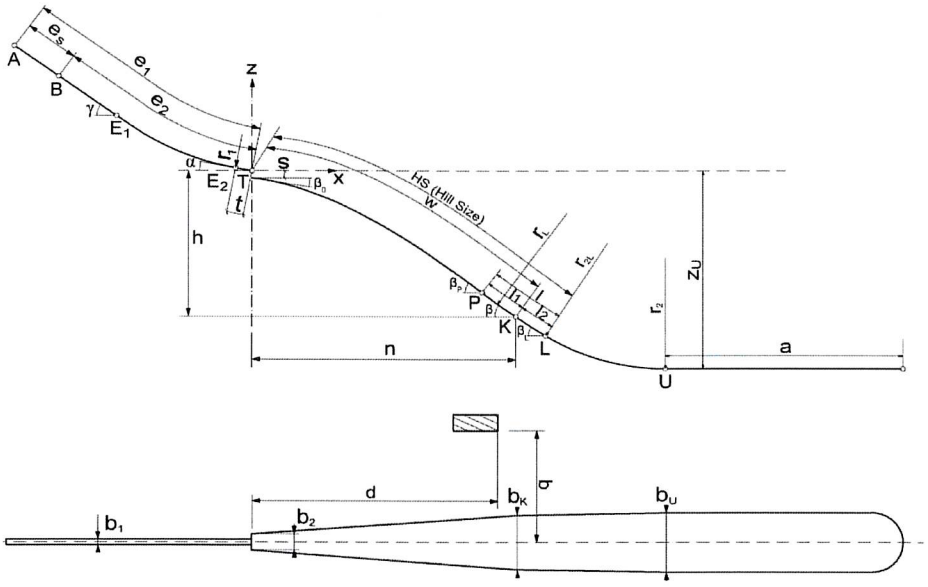

e_1	=	82,71	m		Vo	=	25,88	m/s		P	= 69,31 m
e_2	=	62,50	m		l_1	=	7,42	m		K	= 76,73 m
e_s	=	20,22	m	40 gates è=50cm à=29/42cm	l_2	=	8,27	m		L	= 85,00 m
t	=	6,15	m		a	=	75,00	m	sloping up 12,5°	b_1	= 2,50 m
γ	=	35,00	°		β_p	=	33,20	°		b_2	= 5,70 m
α	=	11,00	°		β	=	31,75	°		b_K	= 15,40 m
r_1	=	67,50	m		β_L	=	30,40	°		b_U	= 17,50 m
h	=	35,22	m		r_L	=	170,00	m		d	= / m
n	=	67,33	m		r_{2L}	=	144,00	m		q	= / m
s	=	1,90	m		r_2	=	65,00	m		Z_U	= 51,30 m

Remarks / Bemerkungen

1. inspection by Hubert Mathis (10th October 2023)
2. the remarks of the inspection-report must be observed and fulfilled for the validity of certification.
3. for fulfilling the (FIS ICR) standards of the jumpinghill, the owner is responsible during training and competition.

JUMPING HILL APPROVED BY THE FIS
TREMPLIN HOMOLOGUE PAR LA FIS
DURCH DIE FIS GENEHMIGTE SPRUNGSCHANZE

SUB-COMMITTEE FOR JUMPING HILLS

CHAIRMAN:

Hans-Martin Renn